Parallel Computing

Topics to be covered

- Flynn’s taxonomy
- Parallel Computing Memory Architectures
- Types of parallelism

Flynn's Taxonomy

- Most widely used way to classify computers.
- Uses the stream concept for describing a computer's structure.
- Based on the multiplicity of instruction streams and data streams in a computer system.

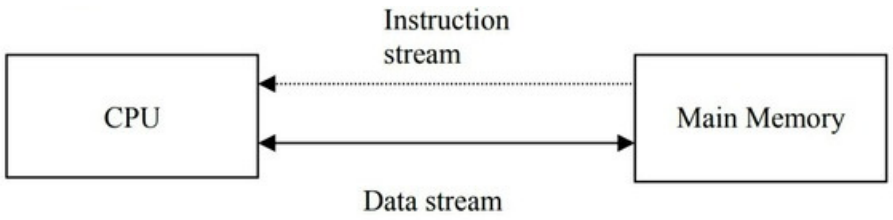

Data stream \ Instruction stream	Single	Multiple
Single	SISD	MISD
Multiple	SIMD	MIMD

SISD (Single Instruction Single Data)

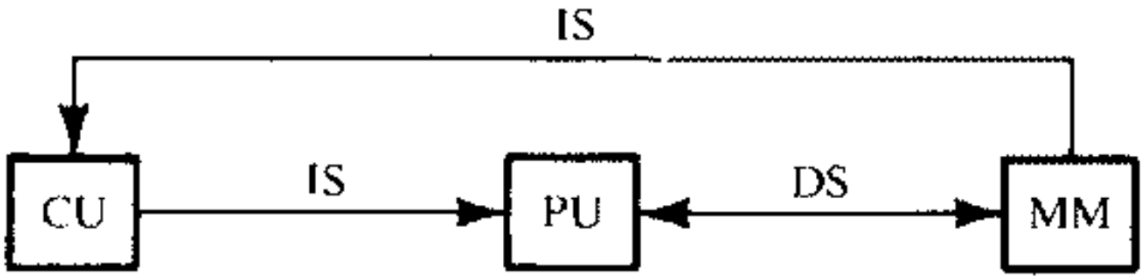

(*a*) SISD computer

SIMD (Single Instruction Multiple Data)

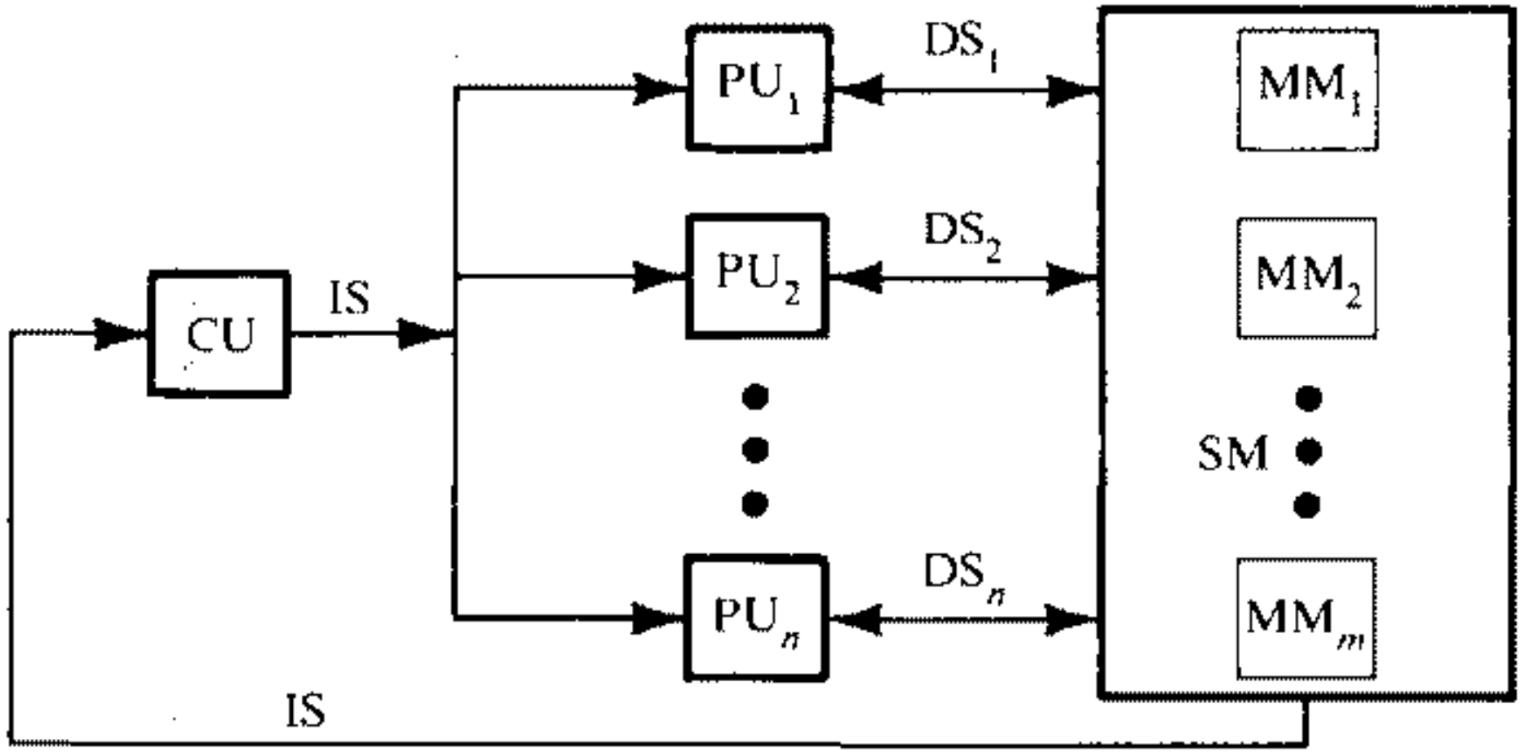

(b) SIMD computer

MISD (Multiple Instruction Single Data)

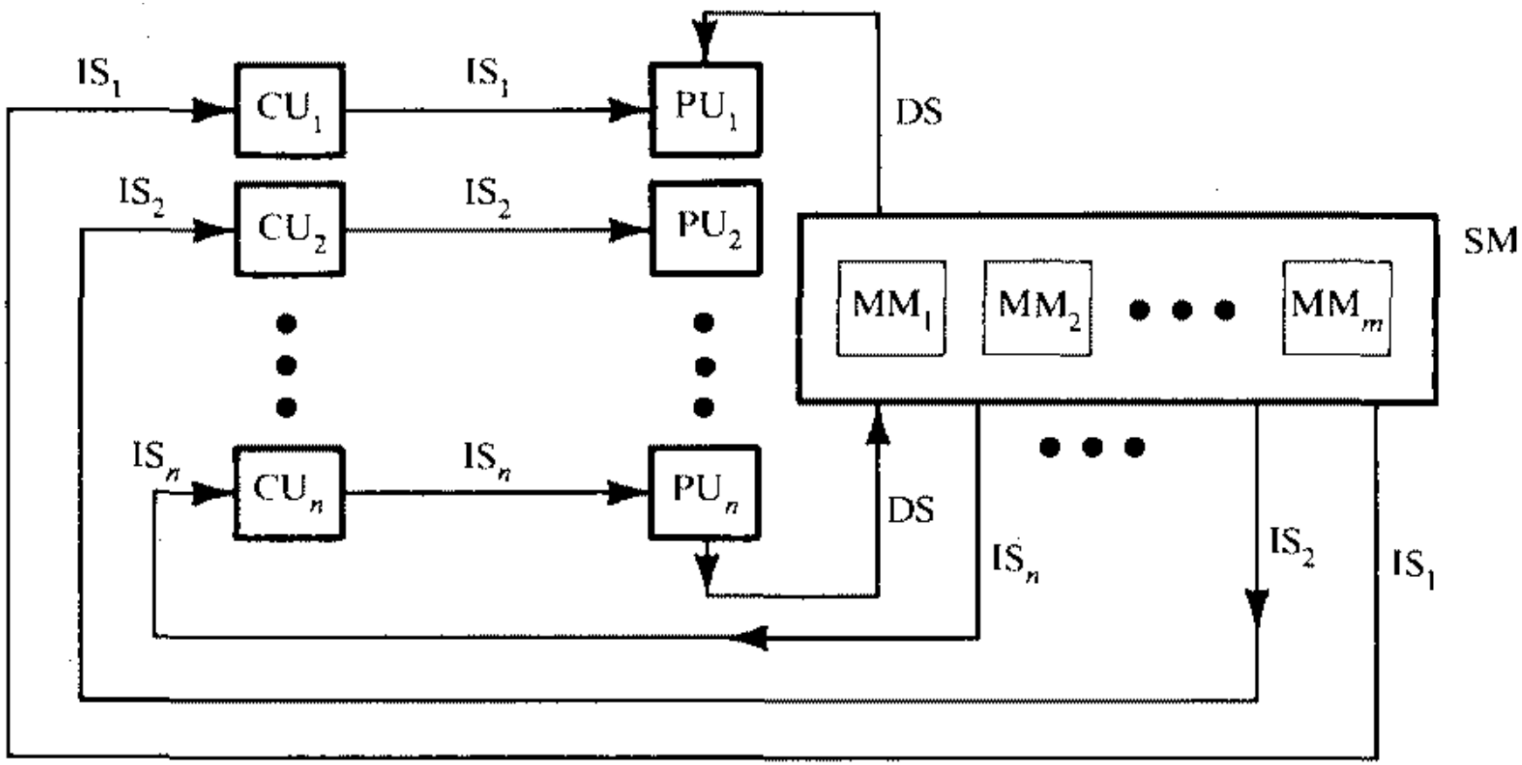

(c) MISD computer

MIMD (Multiple Instruction Multiple Data)

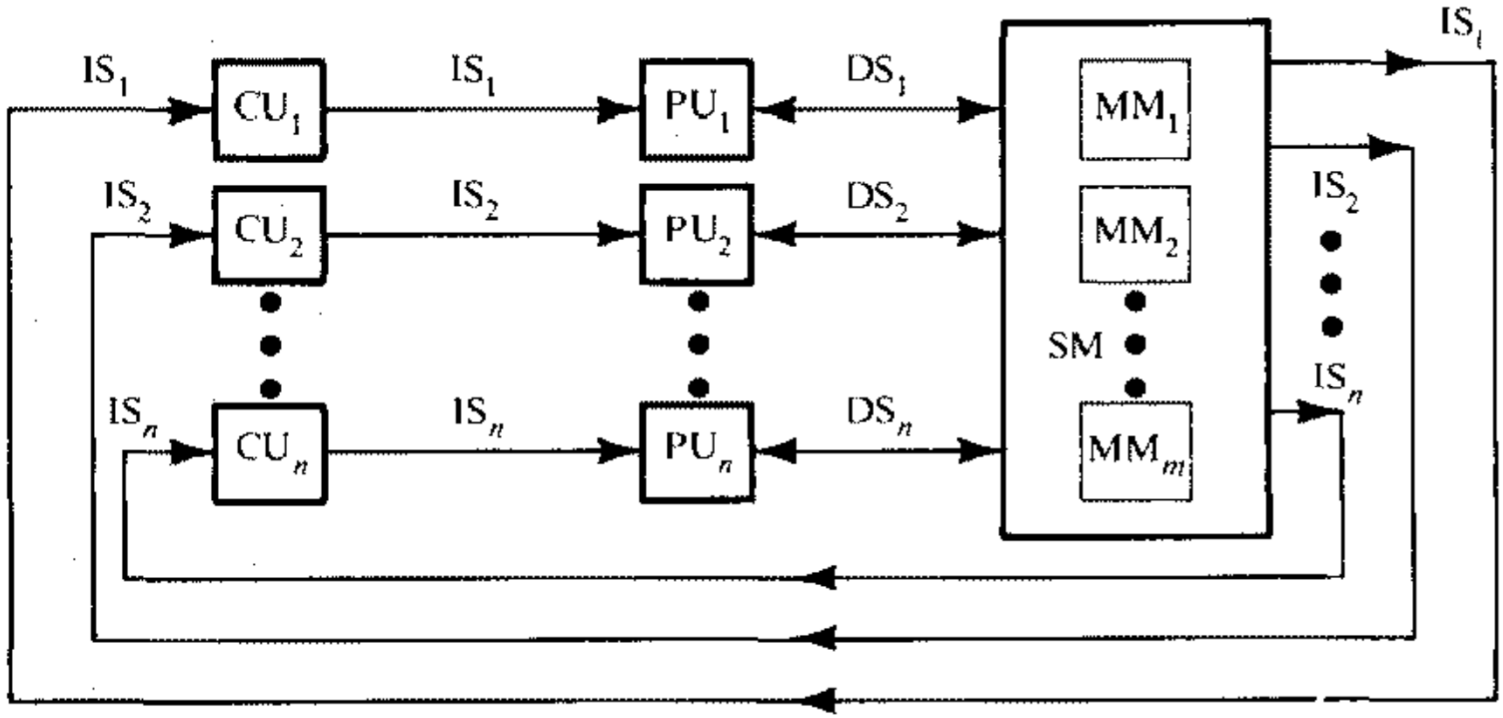

(*d*) MIMD computer

Multiprocessor Systems

- A system consisting of two or more processors, where all processors share access to common sets of memory modules, I/O channels and peripherals.
- Advantages:
  - Increased throughput
  - Economy of scale
  - Increased reliability

- Asymmetric multiprocessing or Symmetric Multiprocessing.

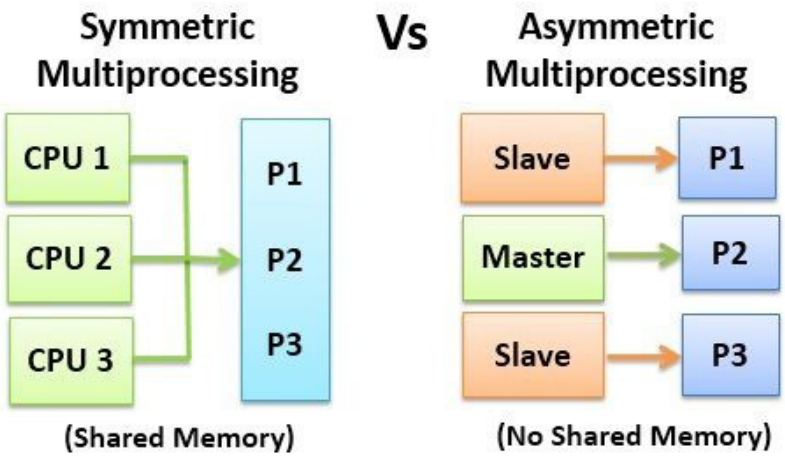

- Multicores

Parallel Computing Memory Architectures

- Shared Memory (tightly coupled systems)
  - Uniform Memory Access (UMA)
  - Non-uniform Memory Access (NUMA)
  - Cache only memory access (COMA)
- Distributed Memory (loosely coupled systems)
- Hybrid Distributed-Shared Memory

Shared Memory

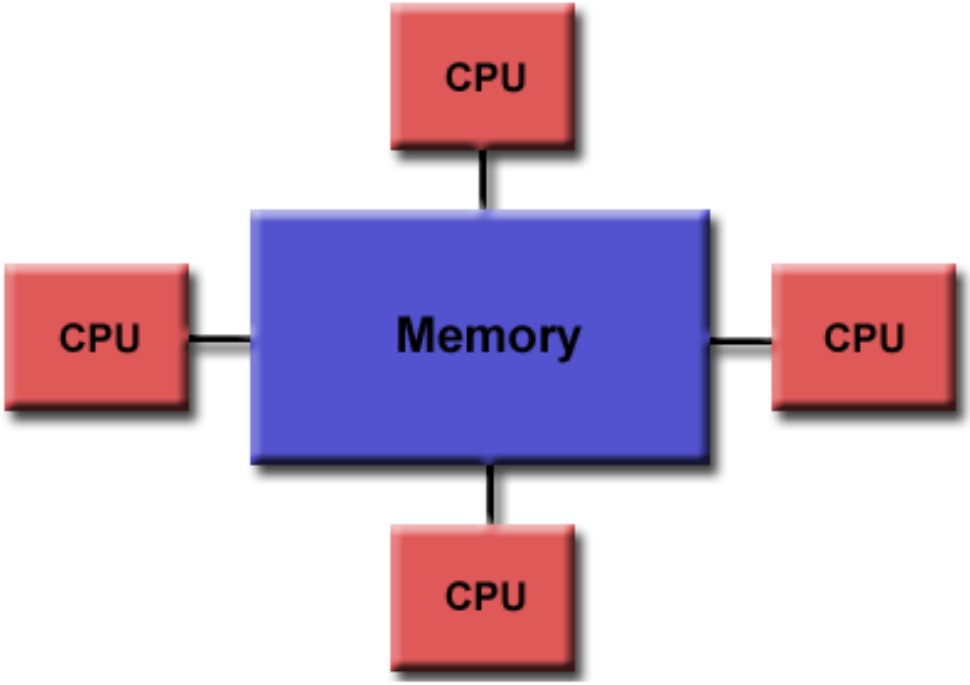

UMA

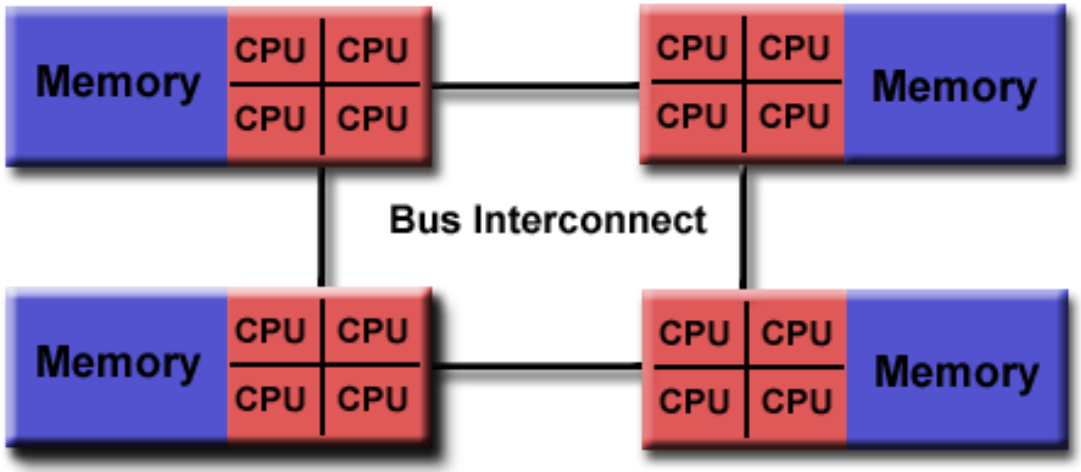

NUMA

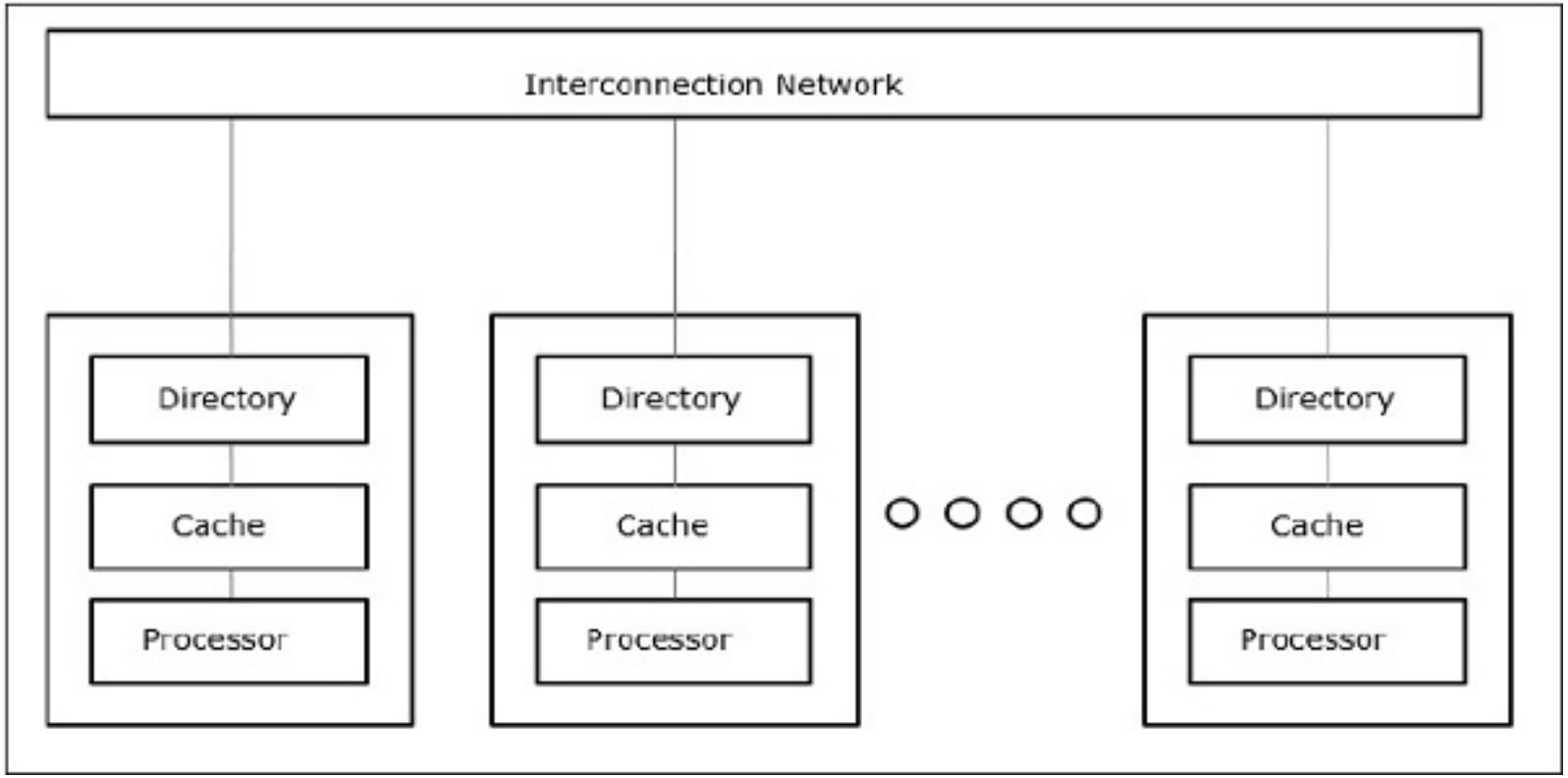
Interconnection Network
Directory
Cache
Processor
Directory
Cache
Processor
Directory
Cache
Processor

COMA

Distributed Memory

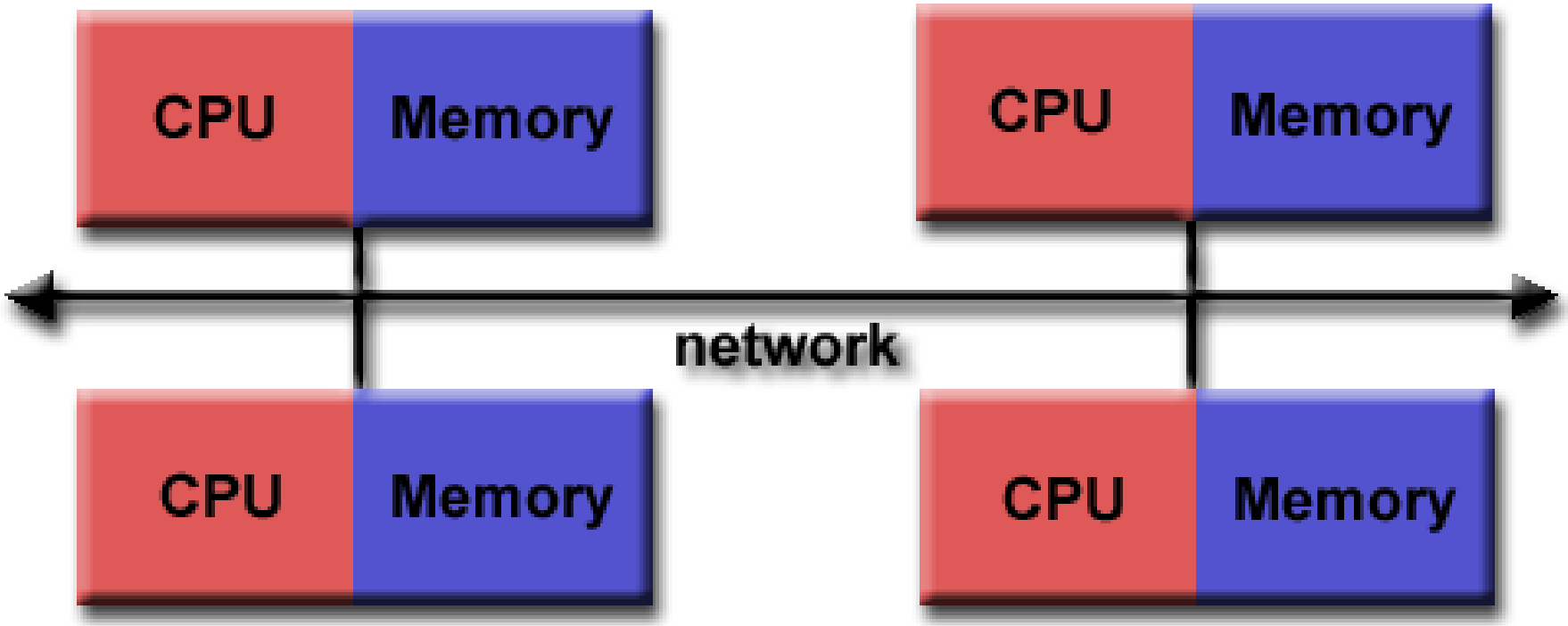

Hybrid Memory

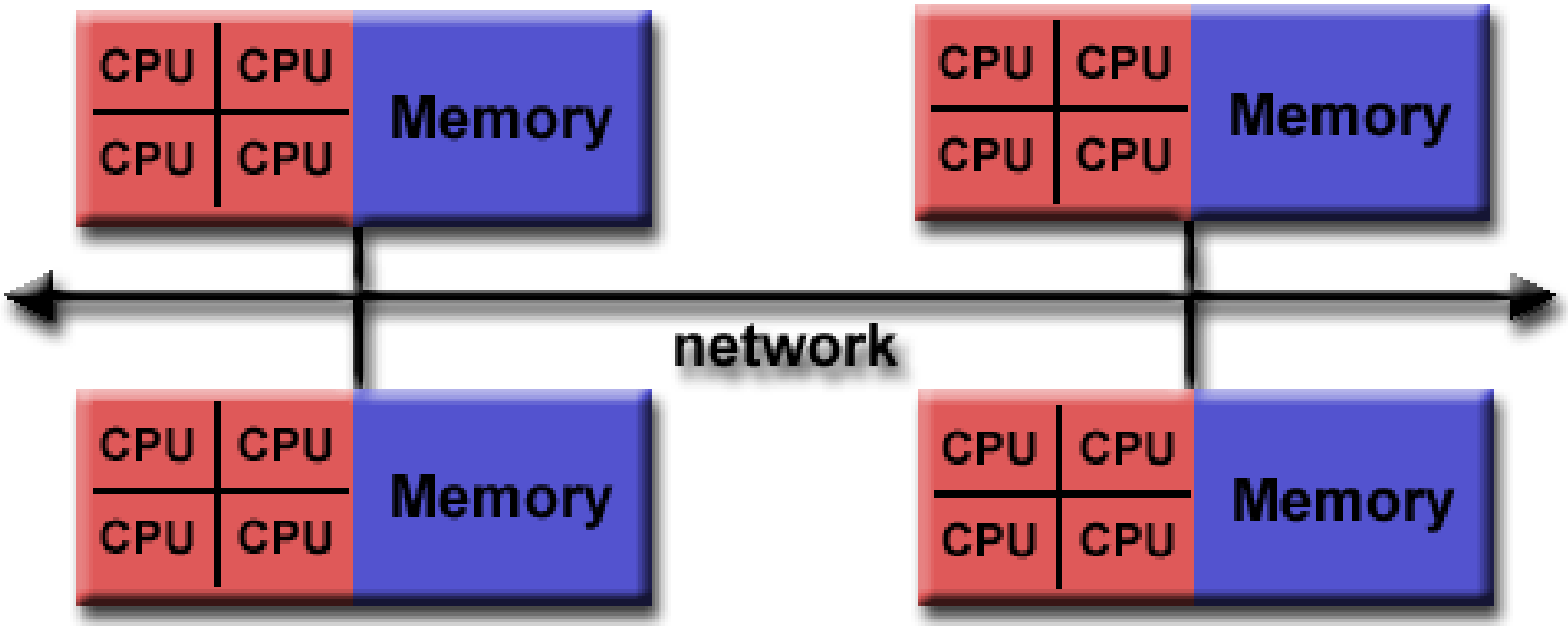

Types of Parallelism

- Bit level parallelism
- Instruction level parallelism
- Data level parallelism
- Task level parallelism

Questions?